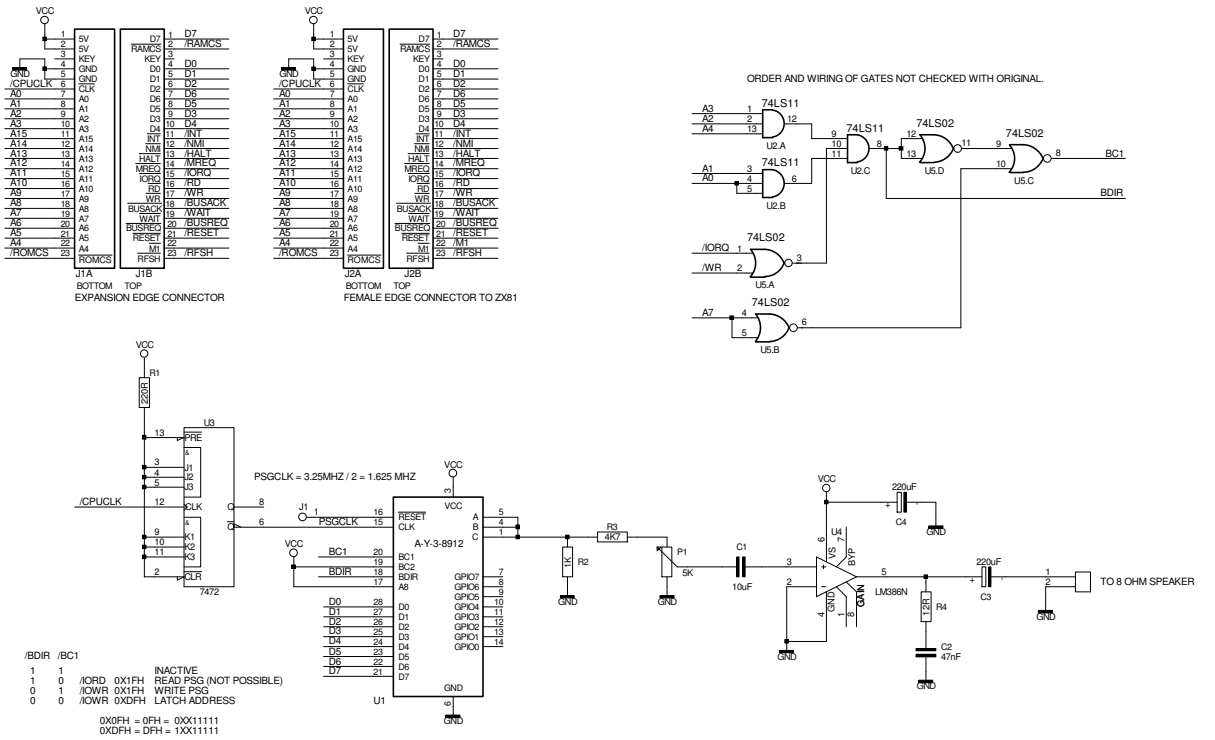

/BDIR	/BC1			
1	1			INACTIVE
1	0	/IORD	0X1FH	READ PSG (NOT POSSIBLE)
0	1	/IOWR	0X1FH	WRITE PSG
0	0	/IOWR	0XDFH	LATCH ADDRESS

0X0FH = 0FH = 0XX11111
0XDFH = DFH = 1XX11111

ZON X VERSION, THE EARLIER ZON X-81 USED A DECODER WHERE A4 NEEDED TO BE 0 WHICH IS INCOMPATIBLE WITH A SPECTRUM

1FH ACTUALLY CAN BE ANY ODD ADDRESS BETWEEN 1FH AND 7FH
DFH ACTUALLY CAN BE ANY ODD ADDRESS BETWEEN 9FH AND FFH

REV: 1.0	DATE: 14/06/2016	ENG: MAHJONGG
PROJECT:	ZONX PSG FOR ZX81 & SPECTRUM	
COMPANY: REVSPACE ADDRESS: SPOORLAAN 5D, 2495AL CITY DEN HAAG COUNTRY: NETHERLANDS		
INITIAL 14/06/2016	PAGE: 1	OF: 1